ELITE SCREENS

Starling Tab-Tension 2 Series Dimensions Table

Model Number	Diagonal Size	Aspect Ratio	Case Length (A)	Bracket Distance (A1)	Screen Width (A2)	View Width (A3)	Weight Bar (A4)	Overall Height with Bracket (B)	Screen Height (B1)	View Height (B2)	Bottom Border (B3)	Top Black Border (B4)
Unit: Inches												
STT100UWH2-E24	100"	16:9	105.3	73.8	94.1	87.2	96.3	81.4	75.1	49.0	2.3	24.0
STT100XWH2-E24	100"	16:9	105.3	73.8	94.1	87.2	96.3	81.4	75.1	49.0	2.3	24.0
STT120UWH2-E14	120"	16:9	122.6	91.1	111.4	104.5	113.6	81.2	74.9	58.9	2.3	14.0
STT120XWH2-E14	120"	16:9	122.6	91.1	111.4	104.5	113.6	81.2	74.9	58.9	2.3	14.0
Unit: mm												
STT100UWH2-E24	100"	16:9	2675	1875	2389	2215	2445	2068	1908	1245	58	610
STT100XWH2-E24	100"	16:9	2675	1875	2389	2215	2445	2068	1908	1245	58	610
STT120UWH2-E14	120"	16:9	3115	2315	2829	2655	2885	2063	1903	1495	58	356
STT120XWH2-E14	120"	16:9	3115	2315	2829	2655	2885	2063	1903	1495	58	356

Note: Data Error ±1"
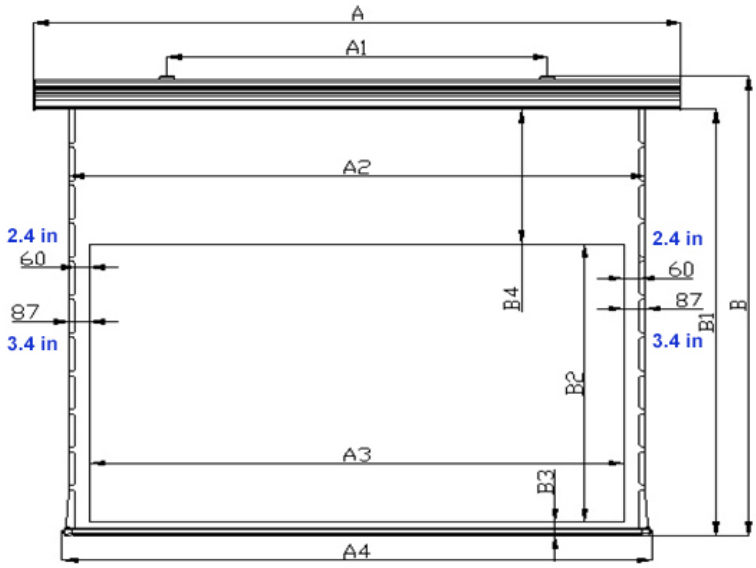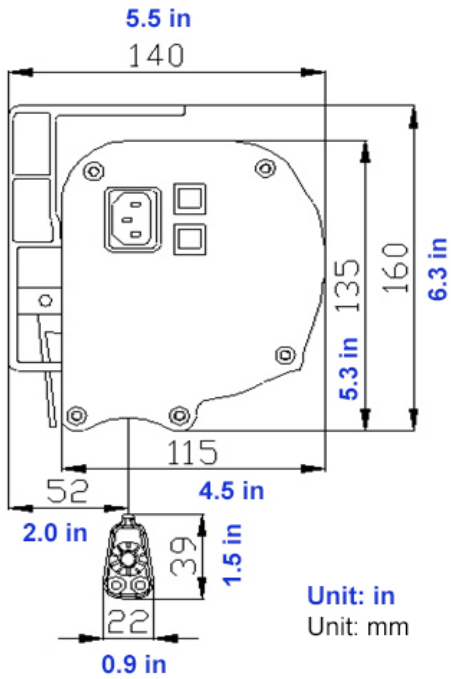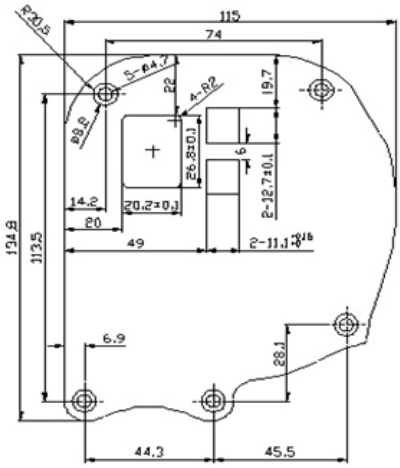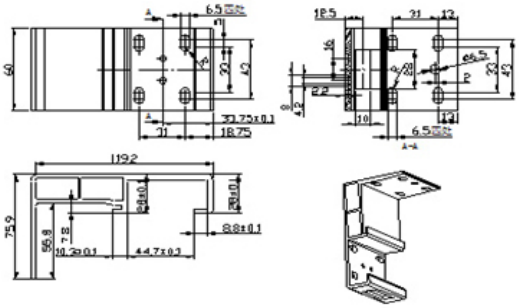
The listed measurements are for general reference only. Please contact Elite Screens to verify product design and dimensions before attempting to integrate its products with any structural or furniture modification. Although a manufacturer may offer product advice, it may be taken or disregarded at the integrator's discretion. Elite Screens will not be held responsible or be otherwise liable for faulty installations.